## Style L

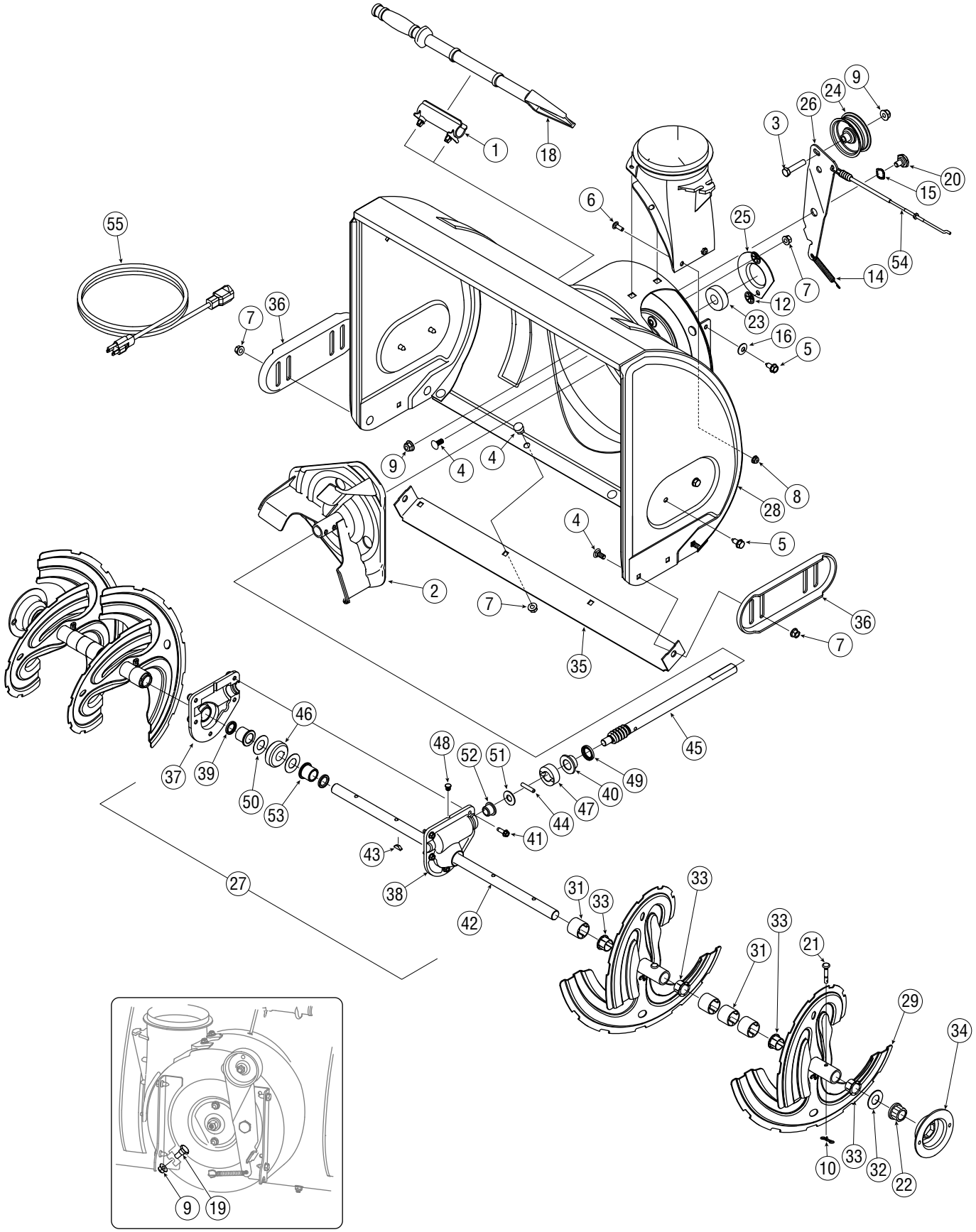
1
18
9
24
26
3
20
15
6
25
54
14
55
7
12
23
16
5
36
7
9
4
4
8
28
4
5
2
7
36
7
35
46
48
52
51
45
37
39
50
53
49
40
47
44
41
43
27
38
42
31
33
33
31
33
21
29
34
10
33
32
22


9
19

| | | |
|---|---|---|
| 1. | 731-2635 | Snow Removal Tool Mount |
| 2. | 684-04057 | Impeller Assembly, 12" Dia. |
| 3. | 710-0347 | Hex Screw, 3/8-16, 1.75, Gr5 |
| 4. | 710-0451 | Bolt, Carriage, 5/16-18, .750 Gr1 |
| 5. | 710-0604A | Screw, 5/16-18, 0.625 |
| 6. | 710-0703 | Screw, Carriage, 1/4-20, .750, Gr5 |
| 7. | 712-04063 | Nut, Flange Lock, 5/16-18, Nylon |
| 8. | 712-04064 | Nut, Flange Lock, 1/4-20, Nylon |
| 9. | 712-04065 | Nut, Flange Lock, 3/8-16, Nylon |
| 10. | 714-04040 | Cotter Pin, Bow-tie |
| 11. | 725-0157 | Cable, Tie, 3/16 x .05 x 7.4 |
| 12. | 726-04012 | Nut, Push-on, .25 Dia |
| 13. | 731-04705 | Chute, Adapter 5" Dia |
| 14. | 732-0611 | Spring, Extension, .38 OD x 3.6 |
| 15. | 736-0174 | Washer, Wave, .625 x .885 x .015 |
| 16. | 736-0242 | Washer, Bell, .340 x .872 x .060 |
| 17. | 736-0463 | Washer, Flat, .25 x .630 x .0515 |
| 18. | 731-2643 | Snow Removal Tool |
| 19. | 738-0143 | Screw, Shoulder, .498 x .34, 3/8-16 |
| 20. | 738-0281 | Screw, Shoulder, .625 x .17, 3/8-16 |
| 21. | 738-04124A | Shear Pin, .25 x 1.50 |
| 22. | 741-0245 | Bearing, Hex Flange x .75 ID |
| 23. | 741-0309 | Bearing, Ball, .75 ID x 1.85 OD |
| 24. | 756-0981A | Flat Pulley, Idler, 2.75 OD |
| 25. | 790-00075 | Housing, Bearing, 1.85 ID |
| 26. | 790-00080 | Bracket, Auger Idler w/ Brake |
| 27. | 618-04172 | Gearbox Assembly, Auger, 26" |
| | 618-04173 | Gearbox Assembly, Auger, 28" |
| 28. | 684-04070 | Housing Assembly, Auger 26" |
| | 684-04071 | Housing Assembly, Auger 28" |

| | | |
|---|---|---|
| 29. | 684-04107 | Spiral Assembly, LH |
| 30. | 684-04108 | Spiral Assembly, RH |
| 31. | 731-04870* | Spacer, 1.25 OD x .75 ID x 1.00 |
| 32. | 736-0188 | Washer, Flat, .76 x 1.49 x .06 |
| 33. | 741-0493A | Bushing, Flange, .80 ID x .91 OD |
| 34. | 790-00087A | Housing, 1" Hex Bearing |
| 35. | 790-00121 | Shave Plate, 2.25 x 25.66 |
| | 790-00118 | Shave Plate, 2.25 x 27.66 |
| 36. | 790-00091 | Slide Shoe |
| 37. | 719-0319 | Housing, Auger, RH Reduced |
| 38. | 719-0320 | Housing, Auger, LH Reduced |
| 39. | 721-0179 | Seal, Oil, .750 ID |
| 40. | 741-0662 | Bearing, Flange, .75 x 1.0 x .59 |
| 41. | 710-0642 | Screw, Self-tapping, 1/4-20, 0.750 |
| 42. | 711-04284 | Axle, Auger, 26" |
| | 711-04283 | Axle, Auger, 28" |
| 43. | 714-0161 | Key, Hi-pro 3/16 x 5/8 |
| 44. | 715-04021 | Pin, Dowel, .25 OD x 1.2 |
| 45. | 717-04126 | Shaft, Worm .75 OD |
| 46. | 717-0528A | Gear, Worm 20T |
| 47. | 718-04071 | Collar, Thrust |
| 48. | 721-0325 | Plug, 1/4 x .437 |
| 49. | 721-0327 | Seal, Oil, .75 x 1 x .131 |
| 50. | 736-0351 | Washer, Flat, .760 ID x 1.5 OD |
| 51. | 736-3084 | Washer, Flat, .51 x 1.12 |
| 52. | 741-0663 | Bearing, Flange, .75 x 1.0 x .925 |
| 53. | 741-0661A | Bearing, Flange, .75 x 1.00 x .975 |
| 54. | 746-04230 | Clutch Cable, Auger, 47.23" |
| 55. | 629-0071 | Extention Cord, 110V |
| | | |

* Two found between spirals on models with 26-inch auger housing.
* Three found between spirals on models with 28-inch auger housing.

NOTE: Snow thrower features and components vary by model. NOT all parts listed above and pictured on the previous page are standard equipment.

## Style L

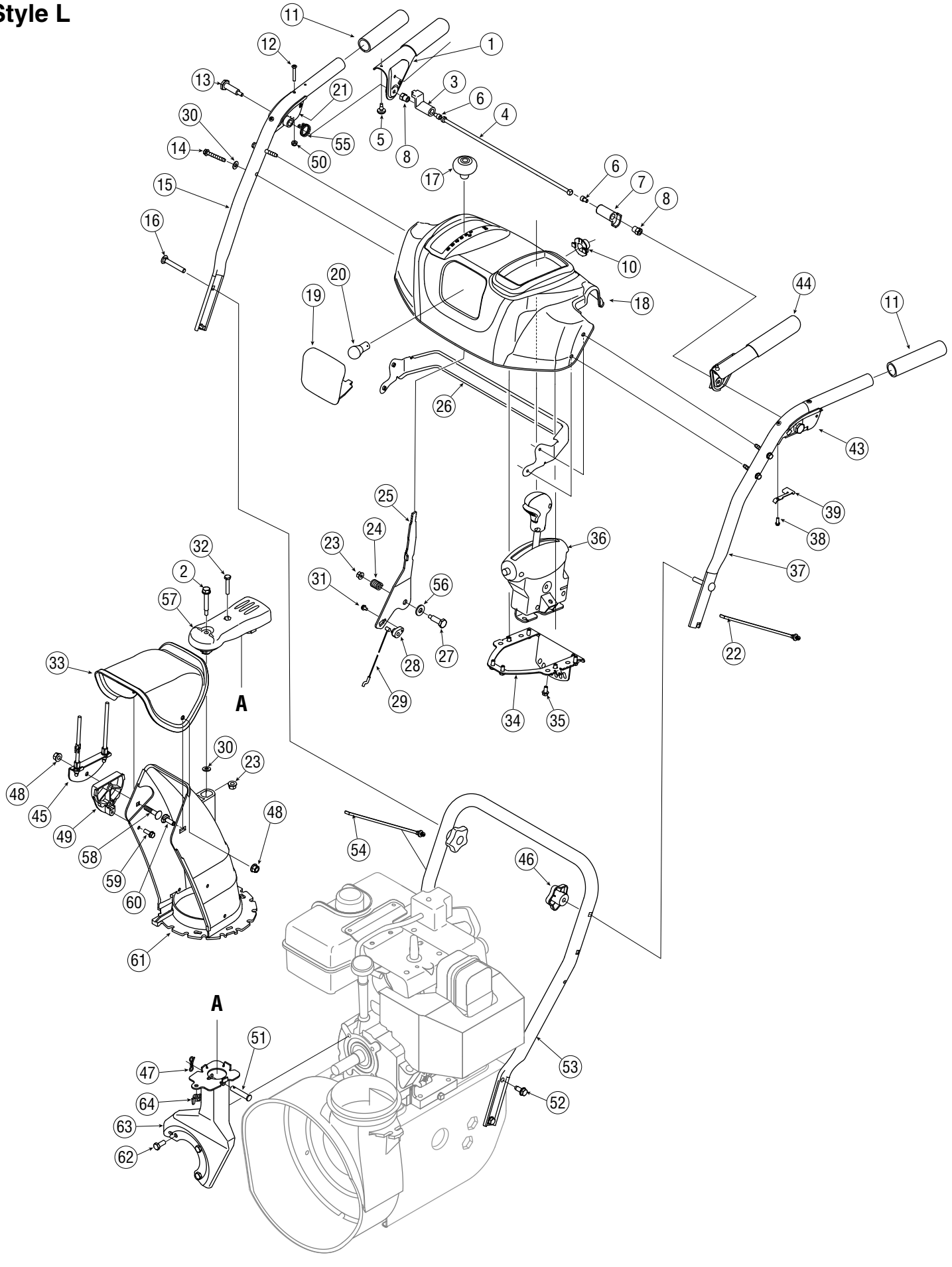

11
12
1
13
21
3
6
30
4
14
55
5
8
50
17
6
7
15
8
16
10
20
44
19
18
11
26
43
25
39
24
38
23
36
32
37
2
31
56
57
27
22
33
28
A
29
34
35
30
23
48
48
45
49
54
58
46
59
60
61
A
51
53
47
64
52
63
62

| | | |
|---|---|---|
| 1. | 684-04109A | Handle Engagement Assembly RH |
| 2. | 738-04194 | Flange Shoulder Screw |
| 3. | 731-04894A | Lock Plate |
| 4. | 711-04287 | Pivot Rod |
| 5. | 735-0199A | Rubber Bumper |
| 6. | 710-04354 | Screw, 1/4-20 x.375 |
| 7. | 731-04896A | Clutch Lock Cam |
| 8. | 712-04081A | Shoulder Nut, 1/4-20 |
| 9. | 725-04214 | Wire Harness (Not Shown) |
| 10. | 725-1649 | Light Socket |
| 11. | 720-0274 | Handle Grip |
| 12. | 710-1233 | Screw, #10-24 x 0.375 |
| 13. | 738-04122 | Shoulder Screw, 1/4-20 x 1.345 |
| 14. | 710-1026 | Screw, 1/4-20 x 1.750 |
| 15. | 749-04141 | Upper Handle RH |
| 16. | 710-0449 | Carriage Screw, 5/16-18 x 2.25 |
| 17. | 720-04046 | Shift Knob |
| 18. | 731-05347 | Handle Panel, K/L-Style, Black |
| 19. | 731-05320 | Lens |
| 20. | 725-04213 | Lamp |
| 21. | 731-04784A | Handle Clutch Lock - RH |
| 22. | 725-0157 | Cable Tie |
| 23. | 712-04064 | Flange Lock Nut, 1/4-20 |
| 24. | 732-0193 | Compression Spring |
| 25. | 790-00203 | Shift Lever |
| 26. | 790-00140 | Panel Bracket |
| 27. | 738-04125 | Shoulder Screw |
| 28. | 746-0605 | Cable Barrel Holder |
| 29. | 746-04227 | Speed Selector Cable |
| 30. | 736-0463 | Flat Washer, .25 x .630 x .0515 |
| 31. | 710-0224 | Screw, #10-16 x .500 |
| 32. | 710-0606 | Hex Screw, 1/4-20 x 1.50 |
| 33. | 731-04427A | Upper Chute |
| 34. | 790-00131 | Joystick Bracket |
| 35. | 710-04187 | Hi-Lo Screw, 1/4-15 x 0.5 |
| 36. | 684-04116B | 4-Way Chute Control™ Assembly (Includes Ref.# 57) |
| 37. | 749-04142 | Upper Handle LH |
| 38. | 710-04326 | Screw, #8-16 x 0.50 |
| 39. | 732-04219 | Clutch Lock Spring |
| 40. | 731-04954 | Steering Control |
| 41. | 738-04126 | Pin, 3/16 |
| 42. | 716-04036 | E Ring |
| 43. | 731-04785 | Handle Clutch Lock - LH |
| 44. | 684-04110A | Handle Engagement Assembly LH |
| 45. | 784-5594 | Cable Bracket |
| 46. | 720-04072 | Handle Knob Assembly |
| 47. | 714-04040 | Bow Tie Cotter Pin |
| 48. | 712-04063 | Flange Lock Nut, 5/16-18 |
| 49. | 731-1313C | Chute Tilt Cable Guide |
| 50. | 712-0161 | Hex Lock Nut, #10-24 |
| 51. | 711-04469A | Clevis Pin |
| 52. | 710-1260A | AB Screw, 5/16-18 x 0.75 |
| 53. | 749-04138 | Lower Handle |
| 54. | 726-0470 | Cable Tie |
| 55. | 732-04238 | Torsion Spring |
| 56. | 736-0262 | Flat Washer |
| 57. | 731-04890A | Joystick Pulley Cover |
| 58. | 710-0262 | Carriage Bolt, 5/16-18 x 1.50 |
| 59. | 710-0895 | Hi-Lo Screw, 1/4-15 x .75 |
| 60. | 710-04071 | Carriage Bolt, 5/16-18 x 1.0 |
| 61. | 731-04861A | Lower Chute |
| 62. | 710-0627 | Hex Screw, 5/16-24 x .750 |
| 63. | 684-04162 | Chute Support Bracket |
| 64. | 712-3087 | Wing Nut, 1/4-20 |
| | | |

NOTE: Snow thrower features and components vary by model. NOT all parts listed above and pictured on the previous page are standard equipment.

## Style L

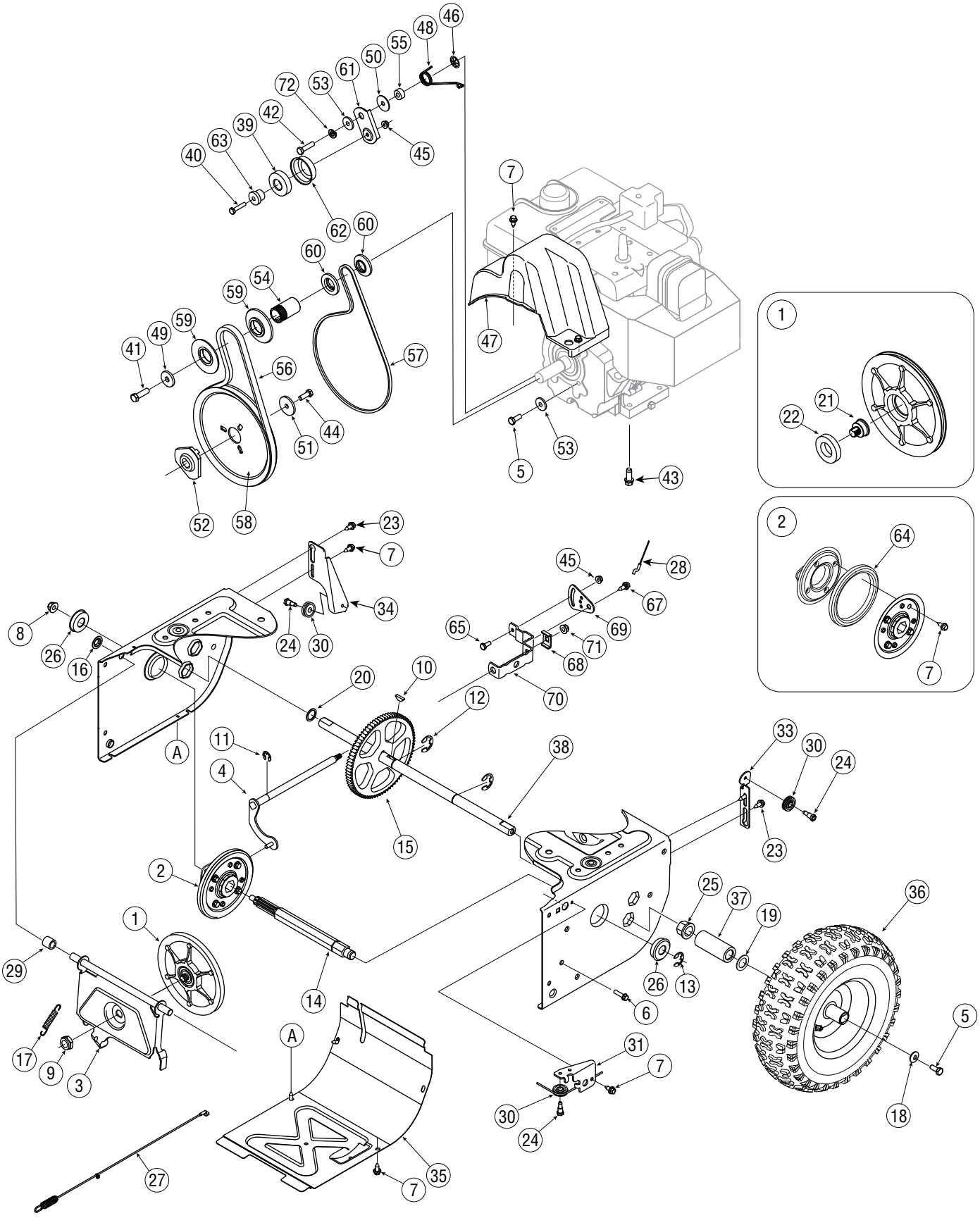

| | | |
|---|---|---|
| 1. | 656-04025A | Disc, Friction Wheel |
| 2. | 684-04153 | Friction Wheel Assembly, 5.5 OD |
| 3. | 684-04154 | Support Bracket, Friction Wheel |
| 4. | 684-04156 | Shift Assembly, Rod |
| 5. | 710-0627 | Hex Screw, 5/16-24, .750, Gr5 |
| 6. | 710-0788 | Screw, 1/4-20, 1.000 |
| 7. | 710-0896 | Screw, 1/4-14 x .625 |
| 8. | 712-04065 | Nut, Flange Lock, 3/8-16, Nylon |
| 9. | 712-0413 | Nut, Jam Lock, 5/8-18, Gr5, Nylon |
| 10. | 714-0126 | Key, Hi Pro, 3/16 x 3/4 Dia. |
| 11. | 716-0104 | E-ring, .500 Dia. |
| 12. | 716-0136 | E-ring, Retaining, .875 Dia. |
| 13. | 716-0231 | E-ring, .750 Dia. |
| 14. | 717-04209 | Hex Shaft, .8125, 7-Tooth |
| 15. | 717-04230 | Gear, 80-Tooth |
| 16. | 726-0221 | Speed Nut, .500 |
| 17. | 732-0264 | Extension Spring |
| 18. | 736-0242 | Washer, Bell, .340 x .872 x .060 |
| 19. | 736-0287 | Washer, Flat, .793 x 1.24 x .060 |
| 20. | 736-04161 | Washer, Flat, .75 x 1.00 x .060 |
| 21. | 738-04164 | Pin, Friction Disc |
| 22. | 741-04098 | Ball Bearing, 30 x 55 x 13 |
| 23. | 738-04184 | Screw, Shoulder, .37 x .105, 1/4-20 |
| 24. | 738-0924 | Screw, 1/4-28, .375 |
| 25. | 741-0245 | Bearing, Hex Flange x .75 ID |
| 26. | 741-0563 | Bearing, Ball, 17 x 40 x 12 |
| 27. | 746-04229 | Clutch Cable, Wheel, 44.95" |
| 28. | 746-04227 | Speed Selector Cable |
| 29. | 748-0190 | Spacer, .508 ID x .75 OD x .68 |
| 30. | 756-0625 | Roller, Cable |
| 31. | 790-00096 | Front Guide Bracket, Auger Cable |
| 32. | 790-00180 | Frame |
| 33. | 790-00206A | Guide Bracket, Auger Cable |
| 34. | 790-00207A | Guide Bracket, Drive Cable |
| 35. | 790-00226 | Cover, Frame |
| 36. | See Chart | Wheel Assembly |
| 37. | 731-04873 | Spacer, 1.25 x .75 x 3.0 |
| 38. | 738-04168 | Axle, .75 x 22" |
| 39. | 741-0919 | Ball Bearing |
| 40. | 710-0106 | Hex Screw, 1/4-20, 1.25, Gr5 |
| 41. | 710-0191 | Hex Screw, 3/8-24, 1.25, Gr8 |
| 42. | 710-0672 | Hex Screw, 5/16-24, 1.25, Gr5 |
| 43. | 710-0654A | Screw, Sems, 3/8-16, 1.00 |
| 44. | 710-1245B | Hex Screw, 5/16-24, .875, Gr8 |
| 45. | 712-04064 | Nut, Flange Lock, 1/4-20, Nylon |
| 46. | 726-04012 | Nut, Push-on, .25 Dia. |
| 47. | 731-05353 | Cover, Belt |
| 48. | 732-04308A | Spring, Torsion, .850 ID x .354 |
| 49. | 736-0247 | Washer, Flat, .406 x 1.25 x .157 |
| 50. | 736-0362 | Washer, Flat, .330 x 1.25 x .06 |
| 51. | 736-0505 | Washer, Flat, .34 x 1.50 x .150 |
| 52. | 748-04053 | Pulley, Adap, .75 Dia W/dd |
| 53. | 748-04112 | Spacer, Shoulder |
| 54. | 750-04303 | Spacer, .875 ID x 1.185 OD |
| 55. | 750-04477 | Spacer, .340 x .750 x .360 |
| 56. | 754-04050 | Belt, Auger Drive |
| 57. | 754-04088 | Belt, Wheel Drive |
| 58. | 756-04109 | Pulley, Auger Drive, 8.1 x .5 |
| 59. | 756-04113 | Pulley, Half, V x 2.600 OD |
| 60. | 756-04179 | Pulley, Half, 1/4-V x 1.5 OD |
| 61. | 790-00208 | Idler Bracket, Wheel Drive |
| 62. | 790-00230 | Sleeve, Bearing Idler |
| 63. | 750-04571 | Spacer, Shoulder, .26 x .79 x .538 |
| 64. | 735-04054 | Rubber, Friction Wheel, 5.5 OD |
| 65. | 710-0751 | Hex Screw, 1/4-20, .620, Gr5 |
| 66. | 732-04311 | Spring, Torsion, .750 ID x .968 |
| 67. | 738-04184A | Screw, Shoulder, .37 x .105, 1/4-20 |
| 68. | 790-00156 | Bracket, Shift Spacer |
| 69. | 790-00217A | Pivot Bracket, Speed Selector |
| 70. | 790-00218A | Shift Bracket, Speed Selector |
| 71. | 712-04063 | Nut, Flange Lock, 5/16-18, Nylon |
| 72. | 736-0119 | Washer, Lock, 5/16 |

| Wheel Assembly | Wheel Size | Rim Only | Tire Only | Valve Only |
|---|---|---|---|---|
| 634-04142A | 15 x 5 | 634-04151 | 734-1859 | 734-0255 |
| 634-04141** | 16 x 4.8 | 634-04140 | 734-1530 | 734-0255 |

** The wheel axle is mounted in the frame side's upper hex-hole on models equipped with 16-inch wheels.

NOTE: Snow thrower features and components vary by model. NOT all parts listed above and pictured on the previous page are standard equipment.